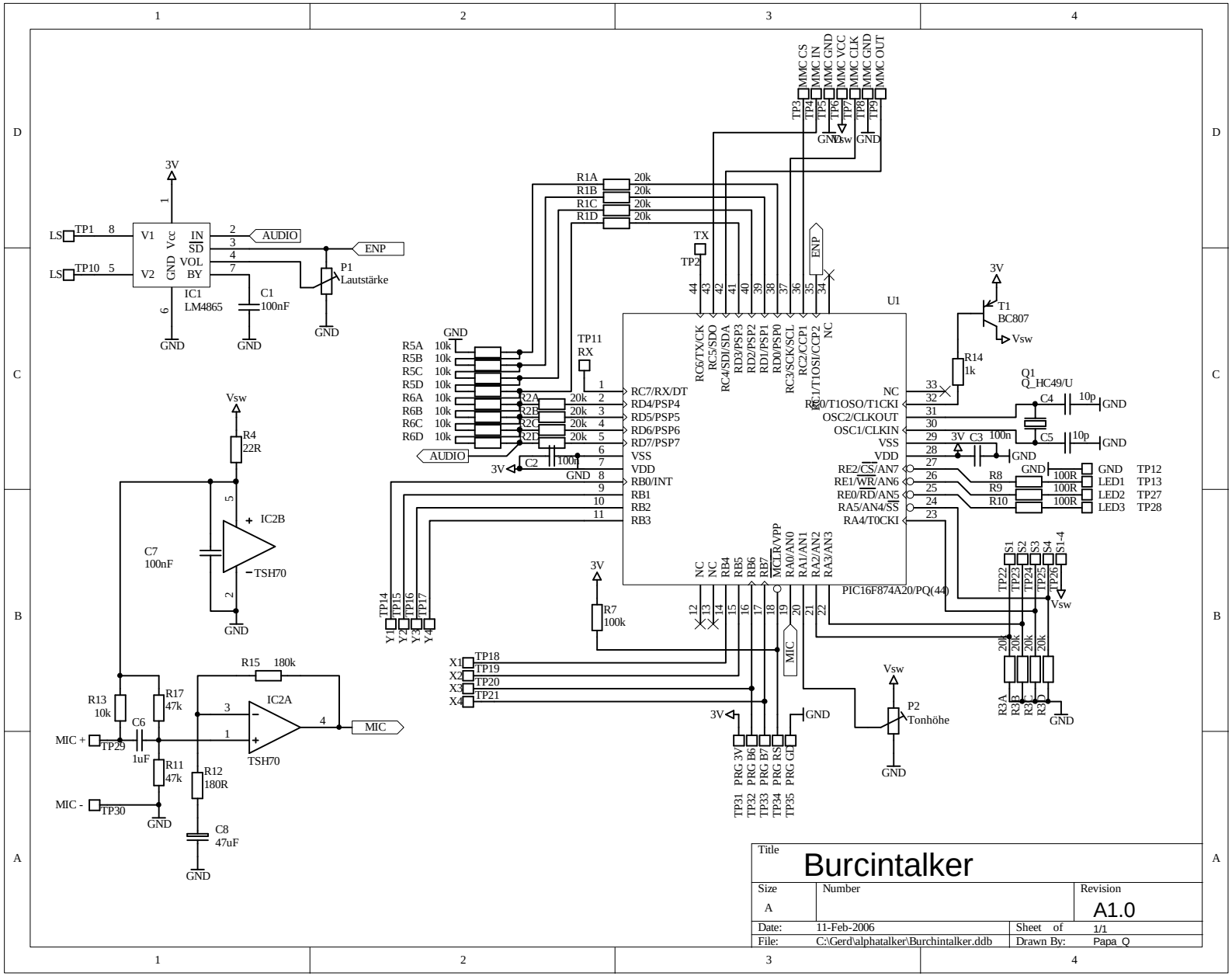

Title		
Burcintalker		
Size: A	Number	Revision: A1.0
Date: 11-Feb-2006	Sheet of 1/1	
File: C:\Gerd\alphatalker\Burchintalker.ddb	Drawn By: Papa_Q	